Baumer

Vision Technologies

SXG10 Facts and Data

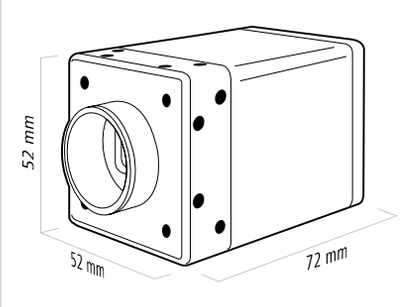

Digital Monochrome Matrix Camera, 1 Megapixel, Dual GigE

Sensor Information

Model Name	Truesense Imaging KAI-01050
Type	1/2" interline progressive scan CCD
Native Resolution	1024 × 1024 pixels
Exposure Time	10 µsec ... 1 sec

Acquisition Formats

Image Formats	Full Frame	1024 × 1024 pixels	max. 120.0 fps
Pixel Formats	Mono8, Mono10, Mono12		
Partial Scan	True Partial Scan, Region of Interest (ROI) arbitrary		

Image Pre-processing

Analog Controls	Gain (0 ... 26 dB), Offset (0 ... 1023 LSB | 14 bit)
Color Modes	Mono

Camera Features

Internal Buffer	256 MBytes (max. 240 images)
Synchronization	Free running, Trigger
Trigger Sources	Hardware, Software, Action Command
Trigger Delay	0 ... 2 sec, Tracking and buffering of up to 512 trigger signals
Digital I/Os	3 input lines (with Debouncer), 3 output lines

Interfaces and Connectors

Data Interface	Dual GigE, Transfer rate 2000 Mbit/sec Connector: 8P8C Modular Jack (RJ45), screw lock type
Process Interface	M8 / 8 pins
Power Interface	M8 / 3 pins

Mechanical Data

Housing	Aluminum, IP40
Lens Mount	C-Mount
Dimensions	52 × 52 × 72 mm^3
Weight	285 g

Electrical Data

Power Supply	20 ... 30 V DC
Power Consumption	approx. 10,5 Watts

Environmental Data

Operating Temperature	+5 °C ... +60 °C (+41 °F ... +131 °F)
Humidity	10% ... 90% non condensing

GigE VISION

GEN<i>CAM

CE FC RoHS COMPLIANT 2002/95/EC

Baumer Optronic GmbH
Badstrasse 30
DE-01454 Radeberg, Germany
Phone +49 (0)3528 4386 0
Fax +49 (0)3528 4386 86
sales@baumeroptronic.com
www.baumer.com/cameras

Technical data has been fully checked, but accuracy of printed matter not guaranteed.
Subject to change without notice. Printed in Germany 07/13